Power Quality Solution

Eaton 9EHD Industrial UPS

Effective power management for every harsh environment

Powering Business Worldwide

Innovative design for the most demanding applications

Eaton's rugged products, innovative designs and advanced solutions deliver performance and uptime for continuous operation in the toughest environments. Our robust portfolio drives energy efficiency, maximises uptime and increases productivity while keeping your demanding operation running profitably. Eaton integrates a full line of uninterruptible power systems, power conversion products, power management software, remote monitoring, turnkey integration services and site support.

The new Eaton® 9EHD uninterruptible power system (UPS) with its effective power management and innovative design provides the highest level of protection for the most demanding applications to meet every harsh environments. The 9EHD comes in two models to satisfy needs for ever-expanding loads.

Eaton 9EHD-31 from 10 – 100kVA

This single-phase output UPS is specifically designed to provide critical power protection for a wide range of applications.

Eaton 9EHD-33 from 10 – 200kVA

This three-phase output UPS with double-conversion topology combines high reliability and high power availability to achieve low total cost of ownership (TCO) as well as low carbon footprint.

Technology

With our extensive working partnership with industrial customers throughout the years, Eaton can address the issues you care about; keeping machines running, streamlining your processes and ensuring a safe working environment.

Low TCO through sustainable design

With a transformer-free design and sophisticated sensing and control circuitry, the 9EHD is capable of achieving up to 98% efficiency rating, making it one of the most energy-efficiency UPSs in its class – and still provides maximum load protection. Unlike most high efficiency UPSs, the 9EHD is able to:

- Provide surge suppression for the load
- Detect the location of faults (utility or load) and takes the appropriate action
- Switch to double-conversion operation in less than 4ms

High system efficiency reduces utility cost, extends battery run times and ensures cooler operating conditions.

Premium power performance and true reliability

Active power factor correction (PFC) provides 0.9 input power factor and <5% ITHD, thus eliminating interference with other critical equipment. With these features, TCO can be further reduced as:

- No generator and cable oversizing is needed
- No requirement for reactive power compensation nor harmonic filtering

Serviceable design

The 9EHD is easily and quickly serviced to provide the highest level of availability with Mean Time to Repair (MTTR) <90 minutes.

Higher reliability

The industrial UPSs are designed to meet the most stringent industry standards. The double-conversion online topology (picture 1) with a static bypass switch is Eaton's choice for industrial use. This protects against all types of power disturbances that may occur in the supplying network. All Eaton UPSs are tested and certified to meet appropriate safety and EMC standards.

The most critical loads may require increased protection. Therefore, all 3-phase systems can be connected to parallel redundant configuration (picture 2).

In such a system, two or more UPSs are supplying and sharing the same load. Should a failure occur in any of the UPS units, the faulty unit is automatically disconnected from the load and the remaining unit or units continue to supply the load. This redundancy leads to extremely high system level reliability.

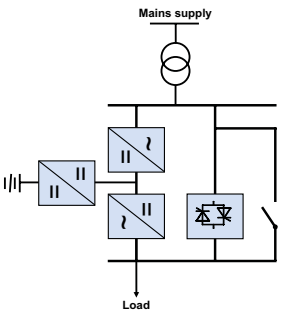

Picture 1.
Double-conversion online UPS topology

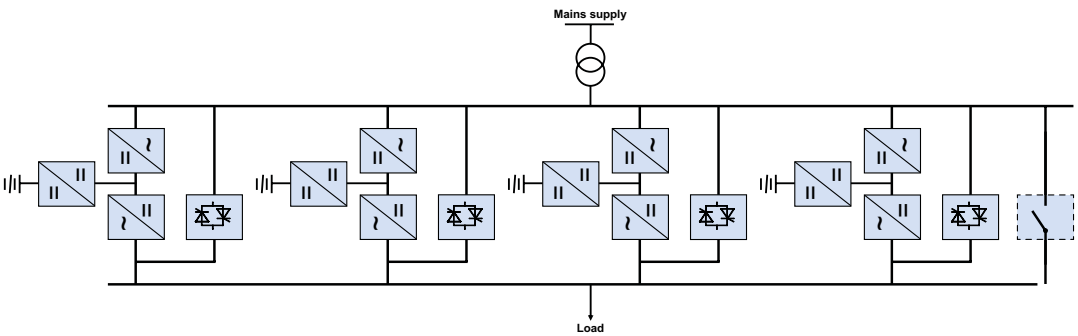

Picture 2.
Parallel redundant UPS system

Effective power technology for the harsh environment

ABM™ technology—extend your battery life and optimise recharge time

Most UPS manufacturers offer constant trickle-charge on their batteries, which degrades them and reduces their service life by as much as 50 percent. In contrast, Eaton's ABM technology uses sophisticated sensing circuitry and an innovative three-stage charging technique that extends the useful service life of UPS batteries while optimising battery recharge time. It also provides advance notice of the end of useful battery service life to allow you ample time to hot-swap batteries without ever having to shut down connected equipment.

Load segments—extend battery time when necessary

Using our protection software, you can independently control load segments, which are groups of receptacles on the rear panel of the UPS. This feature enables you to maximise battery power and provide orderly shutdown and startup of critical equipment. During a power outage, you can shut down non-critical devices to extend available battery time for the critical equipment.

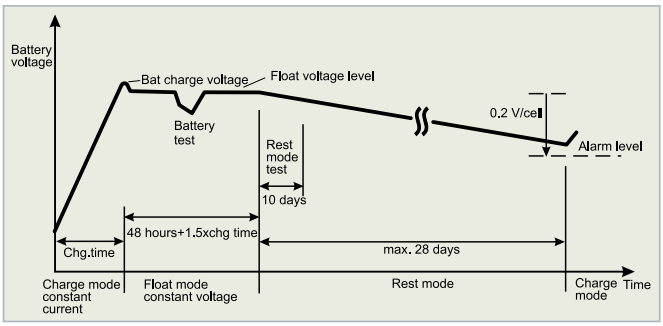

Battery voltage during ABM charging process

Increase your reliability

Eaton's unique, patented Hot Sync® wireless paralleling technology ensures high reliability in systems with multiple Uninterruptible Power Modules (UPM). Patented, and proven in thousands of systems worldwide, Hot Sync enables paralleled UPMs to operate completely independently, so there is no risk of a domino effect with one module affecting or interfering with another. There is also no system-level single point of failure. With Hot Sync, any standard UPS can be used in a parallel system without modification, and with no additional circuitry required. The 9EHD UPS can also be configured with inherent redundancy, to avoid underloading and associated reduced efficiency and reliability.

Key design features of Hot Sync systems

- No system-level single point of failure
- Paralleled UPMs operate completely independently. One module cannot affect or interfere with the others – no domino effect scenario
- No added circuitry is required for parallel operation. Any standard UPS can be used in a parallel system without modification
- This patented and proven technology has been successfully deployed in thousands of systems around the world

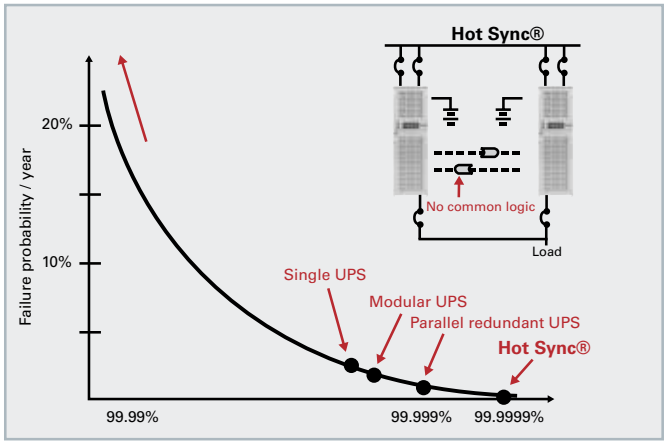

Patented Hot Sync technology provides highest availability for load

Extensive configurability

User interface

Large LCD graphically displays UPS status and offers easy access to measurements, controls and settings. It's event log can analysis:

- Up to 512 events
- Date and time stamp

Connectivity

Web/SNMP cards are complete UPS monitoring, control and shutdown solutions in a networked environment. In case of alert the Web/SNMP card can notify users and administrators through email and SNMP traps. For prolonged power failure, the protected computer systems can be shutdown in a graceful manner with Intelligent Power Protector software.

- **Network Card-MS** Web/SNMP adapter (p/n Network-MS). The Eaton Network Card-MS support SNMP v1 and v3; IPv4 and v6; https and SMTP
- **Environmental Monitoring Probe** (p/n EMP001) adds temperature, humidity and two contact closure monitoring capability. Operating system shutdown can be triggered if user defined thresholds are exceeded or contact closure status changes. EMP works with Network-MS, Network and Modbus-MS.
- **Relay/AS400 card** (p/n RELAY-MS) is an easy connection to industrial and building managment systems.
- **Network and MODBUS card-MS** (p/n MODBUSMS) offers ModBus RTU in addition to Web and SNMP.

Software

Eaton's Intelligent Power® Software Suite incorporates two important applications for ensuring quality power and uptime: monitoring and management of power devices across the network combined with automatic, graceful shutdown when faced with an extended power outage.

- Monitor and manage multiple power devices across your network
- Extend the uptime of dual-powered servers with redundancy capabilities
- Enable server shutdown and live migration events

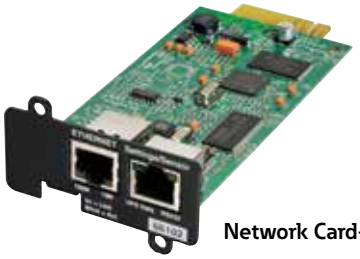

Network Card-MS

Environmental Monitoring Probe

Relay/AS400

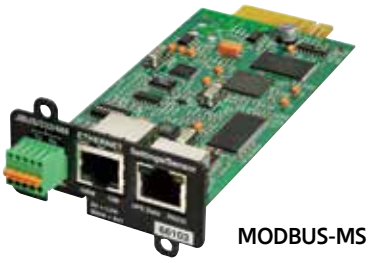

MODBUS-MS card

Applications

- Manufacturing
- Medical
- Offshore and onshore application
- Refining and petrochemical

- Transportation
- Security
- Utilities (water treatment and desalination)

Eaton 9EHD-31 Single Phase Output UPS

Power Rating	**10kVA**	**20kVA**	**30kVA**	**40kVA**	**60kVA**	**80kVA**	**100kVA**
Model	9EHD-31 series						
kVA/KW rating (all modes)	10/9	20/18	30/27	40/36	60/54	80/72	100/90
UPS topology	Double Conversion, IGBT Converters						
Classification	EN62040-3 Class1 (VFI-SS-111)						
Dimensions: W x D x H (mm)	600 x 900 x 1900						
Degree of protection	IP32 (standard), IP42 (optional)						
Cable entry	Bottom						
Conformal coating	PCBA conformal coating						
Colour	RAL 7035						
Weight (kg)	72	88	114	262	282	306	306
Environment							
Ambient storage temperature	Range of -25 to +70°C in the protective package						
Ambient service temperature	Power electronics part: 0 to +40°C (0-50°C with derating) Battery part: +5 to +25°C without reducing battery life						
Maximum service altitude	1000m at 40°C without de-rating Maximum 2000m with 1% de-rating per each additional 100m above 1000m						
Relative humidity	5 to 95%, Non-condensing						
Audible noise at 1m @ 100% Load (ISO7779)	<60dBA	<65dBA		<70dBA		≤70dBA	
Electromagnetic compatibility	Immunity and emission to IEC/EN 62040-2						
User Interface & Communications							
Display	Graphical LCD with blue backlight, 4x LEDs for notice and alarm						
Standard communication ports	2x Mini-Slot, 1x Emergency Power Off input (NC or NO), 3x Building Alarm inputs, 1x RS232 & 1x USB (exclusively for service tool use)						
Electrical Characteristics – Input							
AC Power Distribution System compatibility	TN, TN-S, TN-C, TN-CS, TT (Three-phase,4-wire+PE)						
Rated input voltage and voltage tolerance	Rectifier: 230/400Vac nominal (220/380, 240/415 Selectable) Tolerance: 190/330-276/478V (-15%, +20%) at 100% load, 116/201-276/478V (-50%, +20%) at 50% load Bypass: 230/400V nominal (220/380, 240/415 Selectable) Tolerance: 207/359-253/438V (±10% of nominal, selectable up to ±20%)						
Operating frequency / tolerance	50 or 60Hz; Tolerance 42-70Hz						
Input current distortion	<5% THDi (Typical)						
Input power factor	0.99PF at 100% load (Typical)						
Inrush current	< 5x nominal						
Number of input phases	3 phase + Neutral + PE (3 phase input), 3 phase 3 wire (with ISO transformer as optional)						
	10kVA	**20kVA**	**30kVA**	**40kVA**	**60kVA**	**80kVA**	**100kVA**
Rated rectifier input current (rms @ 400V)	15.4A	30.8A	46.2A	61.6A	92.4A	123A	154A
Max rectifier input current (rms @ 400V)	16.4A	32.9A	49.3A	65.7A	98.6A	131.5A	164A
Bypass input current (rms @ 400V) recommended/maximum	14.4A/16.6A	28.9A/33.2A	43.3A/49.8A	57.7A/66.4A	86.6A/99.6A	115.5A/133A	144A/166A
Electrical Output Characteristics – Double Conversion							
Power rating	**10kVA**	**20kVA**	**30kVA**	**40kVA**	**60kVA**	**80kVA**	**100kVA**
Rated output voltage	230Vac, single phase, (220Vac, 240Vac selectable)						
Output voltage regulation	±1% (Typical)						
Crest factor	3:1						
Rated output frequency	50 Hz (default) or 60 Hz						
Output frequency variation (synchronised if applicable)	±4Hz (default) selectable from ±1Hz to ±4Hz, with slew rate 0.5Hz/sec (default)						
Frequency slew rate of sync with bypass	±3Hz/s default, up to 7Hz/s user settable for single UPS, up to 0.5 Hz/s for parallel UPS						
Output frequency synchronised phase error at change of mode	Maximum of 2.5 degrees						
Total voltage distortion (defined according to EN62040-3)	<2% with no & rated linear load <5% with rated non-linear load					<2% with linear load <7.5% with non-linear load	
Overload capacity without bypass	10kVA~60kVA: 102-110% 60 minutes, 111–125% load 10 minutes, 126–150% load 1 minute, >150% load 500msec 80kVA~100kVA: <125% 10 minutes, <150% 1 minute						
Load power factor range	0.7 lagging to 0.9 leading without de-rating						

Eaton 9EHD-31 Single Phase Output UPS

Electrical Output Characteristics – Stored Energy							
Power rating	**10kVA**	**20kVA**	**30kVA**	**40kVA**	**60kVA**	**80kVA**	**100kVA**
Transfer to/from stored energy	No break						
Rated output voltage	230Vac, single phase, (220Vac, 240Vac selectable)						
Output	Single phase (standard)						
Output voltage regulation	±1% (Typical)						
Crest factor	3:1						
Rated output frequency	50Hz (default) or 60Hz						
Output frequency variation	±0.1Hz						
Total voltage distortion (defined according to EN62040-3)	<2% with no & rated linear load <5% with rated non-linear load					<2% with linear load <7.5% with non-linear load	
Short circuit capability <400ms	80A	120A	80A	120A	120A	400A	480A
Overload capability	10kVA~60kVA: 102–125% load 1 minute, 126–150% load 30 seconds, >150% load 500msec 80kVA~100kVA: 102–125% load 1 minute, 126–150% load 30 seconds, >150% load 150msec						
Load power factor range	0.7 lagging to 0.9 leading without de-rating						
Efficiency (Input/Output)							
Linear load efficiency	**10kVA**	**20kVA**	**30kVA**	**40kVA**	**60kVA**	**80kVA**	**100kVA**
Double conversion mode @ 400V/50Hz — 25% load:	82.0%	88.0%	88.0%	88.0%	87.0%	88.0%	89.3%
50% load:	90.2%	91.5%	91.5%	91.5%	91.0%	91.5%	92.8%
75% load:	92.5%	93.5%	93.5%	93.5%	92.57%	93.2%	93.7%
100% load:	93.5%	93.5%	94.0%	93.5%	93.5%	93.5%	94.0%
Heat dissipation of double conversion mode @ 400V/50Hz — 25% load:	405W	540W	810W	1080W	1755W	2160W	2408W
50% load:	441W	585W	1148W	1530W	2430W	3060W	3240W
75% load:	506W	877.5W	1316W	1755W	3038W	3672W	4253W
100% load:	585W	1117W	1620W	2340W	3510W	4680W	5400W
Bypass Characteristics							
Automatic bypass	Static bypass switch, continuously rated*, no break transfer *bypass capable of 115% continuous load						
Automatic bypass nominal rating	**10kVA**	**20kVA**	**30kVA**	**40kVA**	**60kVA**	**80kVA**	**100kVA**
Automatic bypass thyristor i2t value	1170 A^2S	7200 A^2S	20400 A^2S	133000 A^2S		405000 A^2S	
Separate bypass input feed	Standard (single feed cable links supplied for field fitting)						
Bypass frequency range	±4Hz (default), selectable from ±1Hz to ±4Hz						
Battery							
Battery nominal voltage	NiCad type: 384V (320 Cells) or 408V (340 Cells) or 445V (371 Cells, Default)						
	VRLA type: 384V (192 Cells) or 432V (216 Cells) or 456V (228 Cells) or 480V (240 Cells, default)						
Float charge voltage	NiCad type: 320/340/371 x 1.42V = 454/483/527V						
	VRLA type: 192/216/228/240 x 2.30V = 442/497/524/552V						
Maximum charge voltage	NiCad type: 320/340/371 x 1.56V = 499/530/579V						
	VRLA type: 192/216/228/240 x 2.35V = 451/508/536/564V						
Battery cut off voltage	1.1V/cell for NiCad						
	1.67V/cell for VRLA						
Restored energy time to 90%	Maximum 10 hours recommended (dependent on battery size)						
Charging current (at full load)	**10kVA**	**20kVA**	**30kVA**	**40kVA**	**60kVA**	**80kVA**	**100kVA**
	2.6A	5.21A	7.81A	10.42A	15.63A	20A	
Battery recharge profile	Advanced Battery Management (ABM®) = 90% resting,10% floating/charging (typical)						
Optional Features							
Transformer	Internal input transformer Internal output transformer Bypass transformer						
Power distribution	Rectifier input switch, Bypass switch, Output switch Maintenance bypass switch						
Back-feed protection	Internal back-feed contactor						
User interface and communication	Mini-Slot cards: Web/SNMP, Relay/RS232, Industrial Relay, ModBus						
Certifications							
EMI standards	EN55022/EN55024						
EMC compliance	IEC 62040-2						
Quality	ISO 9001:2000 and ISO 14001:1996						

Eaton 9EHD-33 Three Phase Output UPS

Power Rating	**10kVA**	**20kVA**	**30kVA**	**40kVA**	**60kVA**	**80kVA**	**100kVA**	**150kVA**	**200kVA**
Model	9EHD-33 series								
kVA/KW Rating (all modes)	10/9	20/18	30/27	40/36	60/54	80/72	100/90	150/135	200/180
UPS Topology	Double Conversion, IGBT Converters								
Classification	EN62040-3 Class1 (VFI-SS-111)								
Dimensions: W x D x H (mm)	600 x 900 x 1900								
Degree of protection	IP32 (standard), IP42 (optional)								
Cable entry	Bottom/ Rear								
Conformal coating	PCBA conformal coating								
Colour	RAL 7035								
Weight (kg)	72	88	114	262	282	306	306	457	457
Environment									
Ambient storage temperature	Range of -25 to +70°C in the protective package								
Ambient service temperature	Power electronics part: 0 to +40°C (0-50°C with derating) Battery part: +5 to +25°C without reducing battery life								
Maximum service altitude	1000m at 40°C Maximum 2000m with 1% de-rating per each additional 100m above 1000m								
Relative humidity	5 to 95%, Non-condensing								
Audible noise at 1m @ 100% Load (ISO7779)	<60dBA	<65dBA		<70dBA		≤70dBA			≤75dBA
Electromagnetic compatibility	Immunity and emission to IEC/EN 62040-2								
User Interface & Communications									
Display	Graphical LCD with blue backlight, 4x LEDs for notice and alarm								
Standard communication ports	2x Mini-Slot, 1x Emergency Power Off input (NC or NO), 3x Building Alarm inputs, 1x RS232 & 1x USB (exclusively for service tool use)								
Electrical Input Characteristics									
AC Power Distribution System compatibility	TN, TN-S, TN-C, TN-CS, TT, Three-phase, 4-wire+PE								
Rated input voltage and voltage tolerance	Rectifier: 230/400Vac nominal (220/380, 240/415 Selectable) Tolerance: 190/330-276/478V (-15%, +20%) at 100% load, 116/201-276/478V (-50%, +20%) at 50% load Bypass: 3 x 230/400V nominal (220/380, 240/415 Selectable) Tolerance: 207/359-253/438V (±10% of nominal, selectable up to ±20%)								
Operating frequency / tolerance	50 or 60Hz; Tolerance 42-70Hz								
Input current distortion	<5% THDi (typical)								
Input power factor	0.99PF at 100% load (Typical)								
Inrush current	< 5x nominal								
Number of input phases	3 phase + Neutral + PE (3 phase input), 3 phase 3 wire (with ISO transformer as optional)								
	10kVA	**20kVA**	**30kVA**	**40kVA**	**60kVA**	**80kVA**	**100kVA**	**150kVA**	**200kVA**
Rated rectifier input current (rms @ 400V)	15.4A	30.8A	46.2A	61.6A	92.4A	123A	154A	232A	302A
Max rectifier input current (rms @ 400V)	16.4A	32.9A	49.3A	65.7A	98.6A	131.5A	164A	246A	329A
Bypass input current (rms @ 400V) Recommended/Maximum	14.4A/16.6A	28.9A/33.2A	43.3A/49.8A	57.7A/66.4A	86.6A/99.6A	115.5A/133A	144A/166A	217A/250A	290A/333A
Electrical Output Characteristics – Double Conversion									
Power rating	10kVA	20kVA	30kVA	40kVA	60kVA	80kVA	100kVA	150kVA	200kVA
Rated output voltage	230/400Vac, three phase, (220/380, 240/415 selectable)								
Output voltage regulation	±1% (Typical)								
Crest factor	3:1								
Rated output frequency	50 Hz (default) or 60 Hz								
Output frequency variation (synchronised if applicable)	±4Hz (default) selectable from ±1Hz to ±4Hz, with slew rate 0.5Hz/sec (default)								
Max output frequency slew rate	0.5Hz/s (default), 2.5Hz/s, or 7.5 Hz/s								
Frequency slew rate of sync with bypass	±3Hz/s default, up to 7Hz/s user settable for single UPS, up to 0.5 Hz/s for parallel UPS								
Output frequency synchronised phase error at change of mode	Maximum of 2.5 degrees								
Total voltage distortion (defined according to EN62040-3)	<2% with no & rated linear load <5% with rated non-linear load					<2% with linear load <7.5% with rated non-linear load			
Overload capacity without bypass	102–125% load 10 minutes, 126–150% load 1 minute								
Load power factor range	0.7 lagging to 0.9 leading								

Eaton 9EHD-33 Three Phase Output UPS

Electrical Output Characteristics – Stored Energy									
Power rating	**10kVA**	**20kVA**	**30kVA**	**40kVA**	**60kVA**	**80kVA**	**100kVA**	**150kVA**	**200kVA**
Transfer to/from stored energy	No break								
Rated output voltage	230/400Vac, three phase, (220/380, 240/415 selectable)								
Output voltage regulation	±1% (Typical)								
Crest factor	3:1								
Rated output frequency	50 Hz (default) or 60 Hz								
Output frequency variation	±0.1Hz								
Total output voltage distortion (defined according to EN62040-3)	<2% with no & rated linear load <5% with rated non-linear load					<2% with linear load <7.5% with non-linear load			
Short circuit capability <400ms	80A	120A	160A	240A	360A	400A	480A	800A	900A
Overload capacity without bypass	10kVA~60kVA: 102–125% load 10 minutes, 126–150% load 1 minute, >150% load 150msec 80kVA~200kVA: 102–125% load 1 minute, 126–150% load 30 seconds, >150% load 500msec								
Load power factor range	0.7 lagging to 0.9 leading								
Efficiency (Input/Output)									
Power rating	10kVA	20kVA	30kVA	40kVA	60kVA	80kVA	100kVA	150kVA	200kVA
Linear load efficiency, double conversion mode @ 400V/50Hz — 25% load:	82.0%	88.0%	88.0%	88.0%	87.0%	88.0%	89.3%	90.0%	87.5%
50% load:	90.2%	91.5%	91.5%	91.5%	91.0%	91.5%	92.8%	92.5%	92.0%
75% load:	92.5%	93.5%	93.5%	93.5%	92.5%	93.2%	93.7%	93.5%	93.5%
100% load:	93.5%	93.5%	94.0%	93.5%	93.5%	93.5%	94.0%	93.5%	94.0%
Heat dissipation of double conversion mode @ 400V/50Hz — 25% load:	405W	540W	810W	1080W	1755W	2160W	2408W	3375W	5625W
50% load:	441W	585W	1148W	1530W	2430W	3060W	3240W	5063W	7200W
75% load:	506W	877.5W	1316W	1755W	3038W	3672W	4253W	6581W	8775W
100% load:	585W	1117W	1620W	2340W	3510W	4680W	5400W	8775W	10800W
Linear load efficiency, HE mode — 50% load:	97.5%								
100% load:	98.0%								
Bypass Characteristics									
Automatic bypass	Static bypass switch, continuously rated*, no break transfer *bypass capable of 115% continuous load								
Automatic bypass nominal rating	**10kVA**	**20kVA**	**30kVA**	**40kVA**	**60kVA**	**80kVA**	**100kVA**	**150kVA**	**200kVA**
Automatic bypass thyristor i2t value	1170 A^2S	7200 A^2S	20400 A^2S	133000 A^2S		405000 A^2S		50000 A^2S	1805000 A^2S
Separate bypass input feed	Standard (single feed cable links supplied for field fitting)								
Bypass frequency range	±4Hz (default), selectable from ±1Hz to ±4Hz								
Battery									
Battery nominal voltage	NiCad type: 384V (320 Cells) or 408V (340 Cells) or 445V (371 Cells, Default)								
	VRLA type: 384V (192 Cells) or 432V (216 Cells) or 456V (228 Cells) or 480V (240 Cells, default)								
Float charge voltage	NiCad type: 320/340/371 x 1.42V = 454/483/527V								
	VRLA type: 192/216/228/240 x 2.30V = 442/497/524/552V								
Maximum charge voltage	NiCad type: 320/340/371 x 1.56V =499/530/579V								
	VRLA type: 192/216/228/240 x 2.35V = 451/508/536/564V								
Battery cut off voltage	1.1V/cell for NiCad								
	1.67V/cell for VRLA								
Restored energy time to 90%	Maximum 10 hours recommended (dependent on battery size)								
Charging current (at full load)	**10kVA**	**20kVA**	**30kVA**	**40kVA**	**60kVA**	**80kVA**	**100kVA**	**150kVA**	**200kVA**
	5.3	8A				20A			
Battery recharge profile	Advanced Battery Management (ABM®) = 90% resting,10% floating/charging (typical)								
Optional Features									
Transformer	Internal input transformer Internal output transformer Bypass transformer								
Power distribution	Rectifier input switch, Bypass switch, Output switch Maintenance bypass switch								
Back-Feed protection	Internal back-feed contactor								
User interface and communication	Mini-Slot cards: Web/SNMP, Relay/RS232, Industrial Relay, ModBus								
Certifications									
EMI standards	EN55022/EN55024								
EMC compliance	IEC 62040-2								
Quality	ISO 9001:2000 and ISO 14001:1996								

Eaton is dedicated to ensuring that reliable, efficient and safe power is available when it's needed most. With unparalleled knowledge of electrical power management across industries, experts at Eaton deliver customised, integrated solutions to solve our customers' most critical challenges.

Our focus is on delivering the right solution for the application. But,decision makers demand more than just innovative products. Theyturn to Eaton for an unwavering commitment to personal supportthat makes customer success a top priority.

For more information, visit
www.eaton.com/powerquality

Powering Business Worldwide

4 Loyang Lane #04-01/02
Singapore 508914
E: EatonSEA@eaton.com
T: +65 6825 1684
W: www.eaton.com/ups

Printed in Singapore
November 2014